PAD+
DRAWER ORGANIZATION SYSTEM

Jang

PAD+

PERSONALIZED DRAWER PAD...FOR HIM AND HER

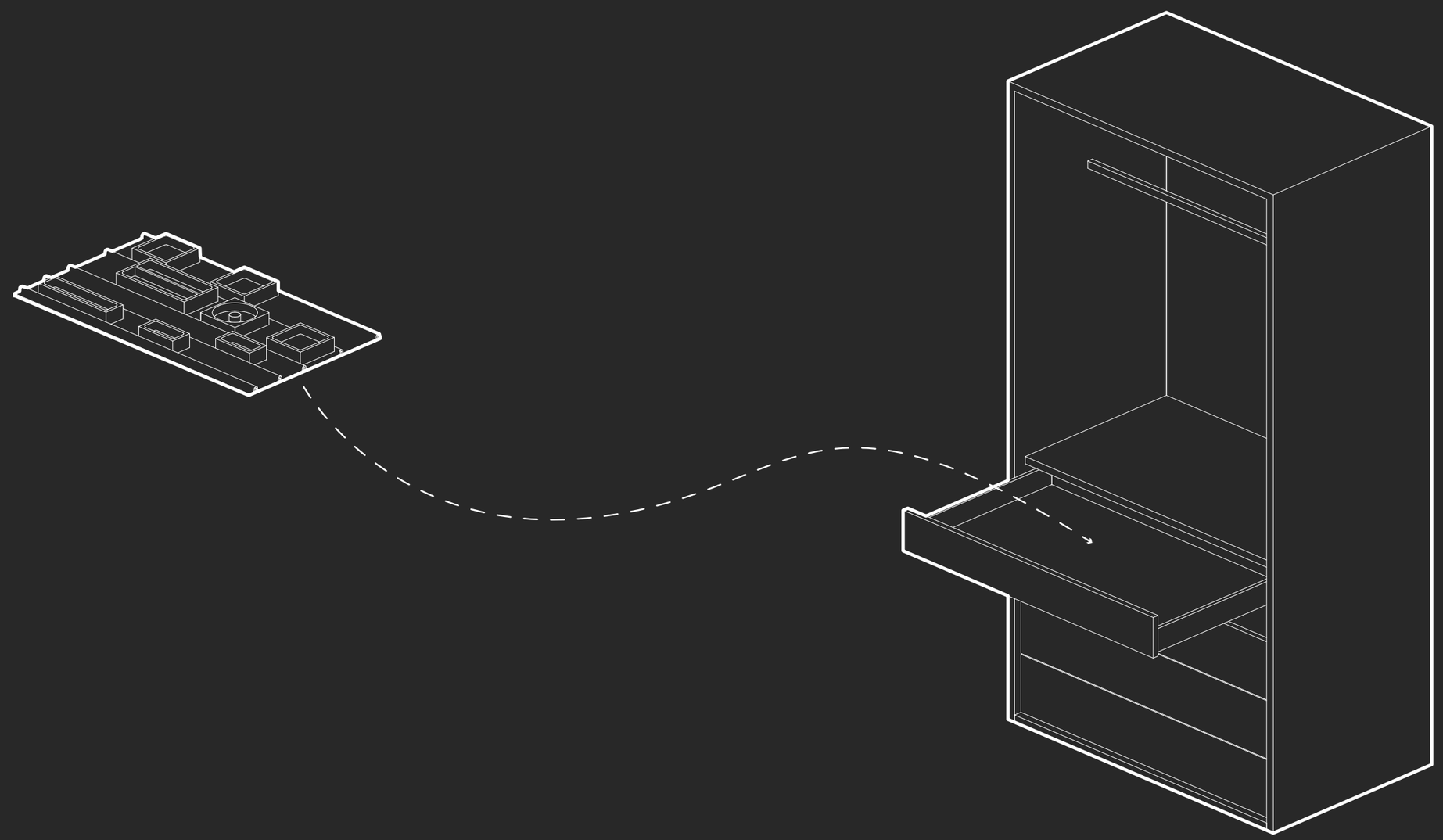

Jewelry
Belts
Ties
Gloves
Glasses
Perfumes
Wallets
Purses

All your tiny treasures can find their own space here...

© JANG 2019

PAD+
ONE PAD SOLUTION

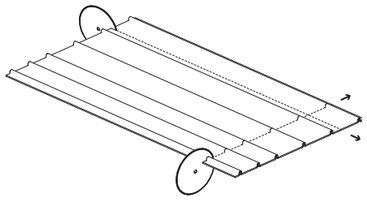

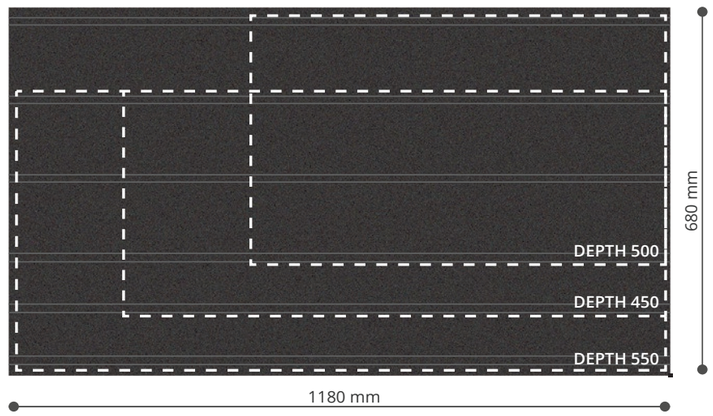

We`h created an universal large PAD, which can be trimmed to any size.
It`s modularity allows to fit it into drawers of depths: 550 / 500 / 450 mm.

The totall PAD size is 1180 x 680 mm.
Cutting generates waste which you can use for a smaller drawers.

Our PAD is produced made using thermoforming process.

© JANG 2019

PAD+
NEW ORDER

© JANG 2019

PAD+
MATERIALITY

Our PAD+ materials are fully sustainable. PAD is made of PET FELT, that means it`s recycled and recyclable. Boxes are made of ash finished in natural wood color or black semi-matt.
In order to provide a soft touch inside each box, we use perforated, natural leather pads.

Natural leather

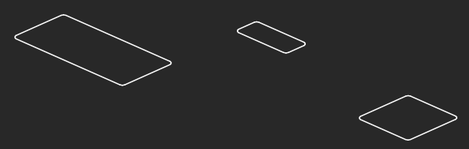

Ash wood

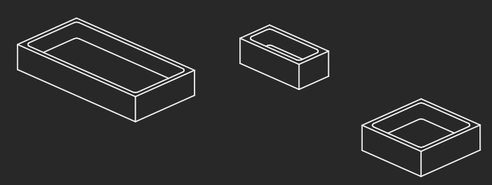

Thermoformed felt

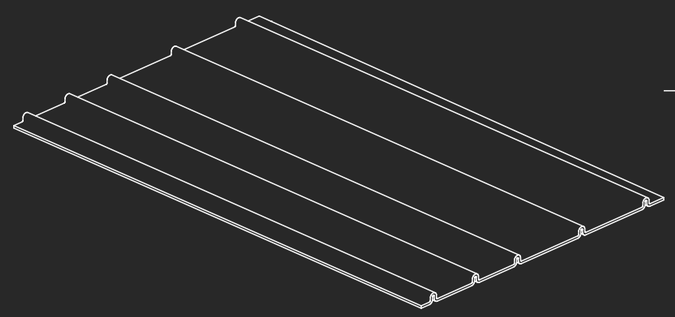

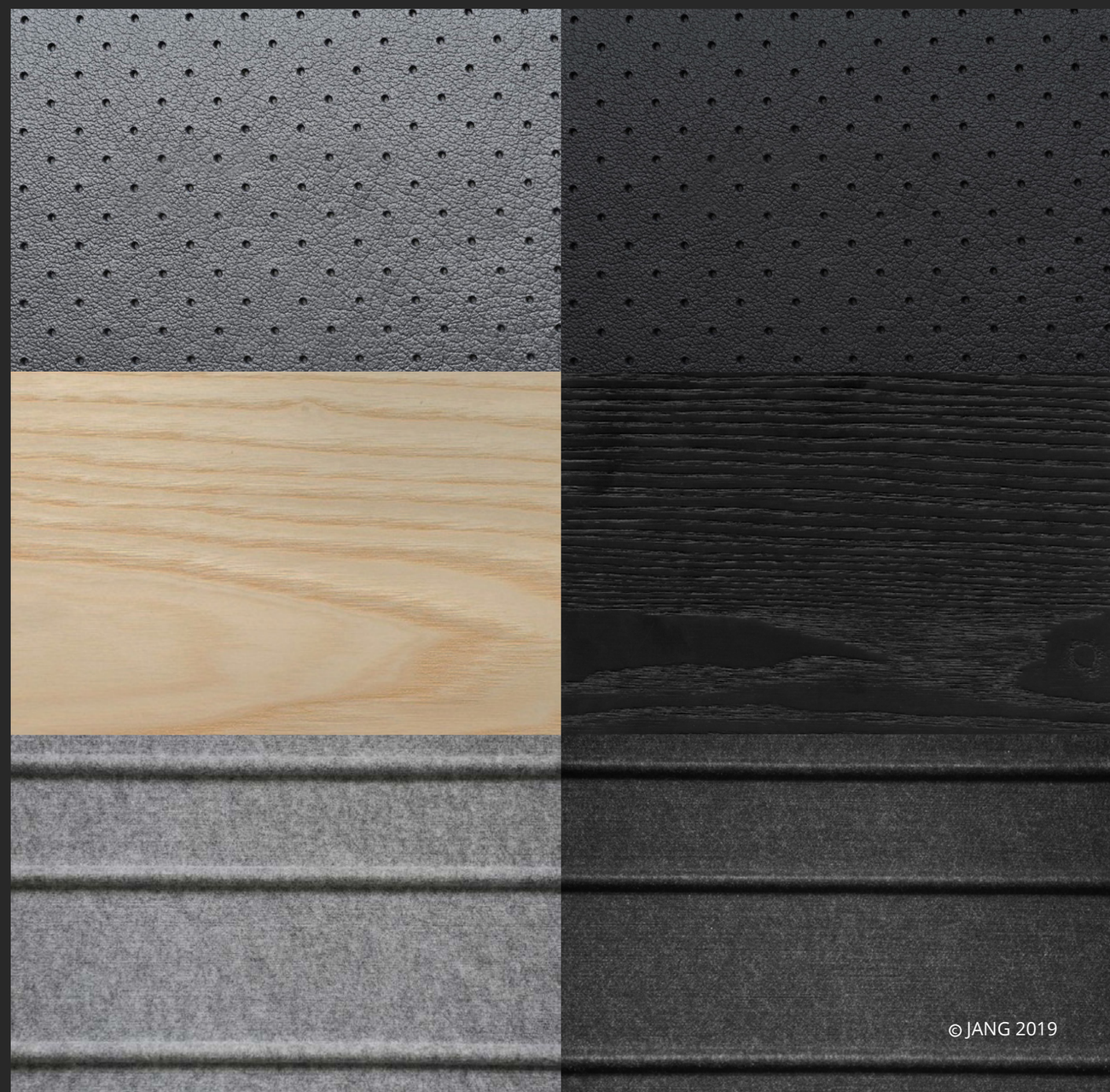

© JANG 2019

PAD+
MOBILITY

You can say that our boxes are mobile.
You don`t need to keep them all in one drawer.
Use can use them in your entire home. On the desk or next to your bed.

© JANG 2019

© JANG 2019

© JANG 2019

© JANG 2019

PAD+

© JANG 2019

© JANG 2019

PAD+

© JANG 2019

PAD+
© JANG 2019

© JANG 2019

PAD+ SETS Drawer depth 550mm

SET	SPECIFICATION	ORDER
module 1200	pad size: 1180 x 680 (needs cut) D_515 mm W_1180-1000 (trim) H_50 mm boxes: 7-10 pcs. colors: black / gray / natural packing: carton weight: ~ 4,5 kg	
module 1000	pad size: 1180 x 680 (needs cut) D_515 mm W_1000-900 (trim) H_50 mm boxes: 7-9 pcs. colors: black / gray / natural packing: carton weight: ~ 4 kg	
module 900	pad size: 1180 x 680 (needs cut) D_515 mm W_900-800 (trim) H_50 mm boxes: 7-9 pcs. colors: black / gray / natural packing: carton weight: ~ 4 kg	
module 800	pad size: 1180 x 680 (needs cut) D_515 mm W_800-700 (trim) H_50 mm boxes: 7-9 pcs. colors: black / gray / natural packing: carton weight: ~ 4 kg	
module 600	pad size: 1180 x 680 (needs cut) D_515 mm W_600 - 500 (trim) H_50 mm boxes: 5-7 pcs. colors: black / gray / natural packing: carton weight: ~ 3,5 kg	

PAD+ SETS Drawer depth 500mm

SET	SPECIFICATION	ORDER
module 1200	pad size: 1180 x 680 (needs cut) D_465 mm W_1180-1000 (trim) H_50 mm boxes: 7-10 pcs. colors: black / gray / natural packing: carton weight: ~ 4,5 kg	
module 1000	pad size: 1180 x 680 (needs cut) D_465 mm W_1000-900 (trim) H_50 mm boxes: 7-9 pcs. colors: black / gray / natural packing: carton weight: ~ 4 kg	
module 900	pad size: 1180 x 680 (needs cut) D_465 mm W_900-800 (trim) H_50 mm boxes: 7-9 pcs. colors:black / gray / natural packing: carton weight: ~ 4 kg	
module 800	pad size: 1180 x 680 (needs cut) D_465mm W_800-700 (trim) H_50 mm boxes: 6-7 pcs. colors: black / gray / natural packing: carton weight: ~4 kg	
module 600	pad size: 1180 x 680 (needs cut) D_465 mm W_600 - 500 (trim) H_50 mm boxes: 5-7 pcs. colors: black / gray / natural packing: carton weight: ~ 3,5 kg	

© JANG 2019

PAD+ SETS

Drawer depth 450mm

SET	SPECIFICATION	ORDER
module 1200	pad size: 1180 x 680 (needs cut) D_465 mm W_1180-1000 (trim) H_50 mm boxes: 7-10 pcs. colors: black / gray / natural packing: carton weight: ~ 4,5 kg	
module 1000	pad size: 1180 x 680 (needs cut) D_465 mm W_1000-900 (trim) H_50 mm boxes: 7-9 pcs. colors: black / gray / natural packing: carton weight: ~ 4 kg	
module 900	pad size:1180 x 680 (needs cut) D_465 mm W_900-800 (trim) H_50 mm boxes: 7-9 pcs. colors: black / gray / natural packing: carton weight: ~ 4 kg	
module 800	pad size:1180 x 680 (needs cut) D_465mm W_800-700 (trim) H_50 mm boxes: 7-8 pcs. colors: black / gray / natural packing: carton weight: ~ 4 kg	
module 600	pad size:1180 x 680 (needs cut) D_465 mm W_600 - 500 (trim) H_50 mm boxes: 5-7 pcs. colors: black / gray / natural packing: carton weight: ~ 3,5 kg	

PAD+ ELEMENTS

ITEM	SPECIFICATION	ORDER
PAD	pad size: 1180 x 680 (needs cut) thickness 22mm colors: black (B) / gray (G) material: thermoformed felt packing: 1carton=15pads weight: ~ 1,5 kg *Trim by standard bench saw	
BOX S	size: 130 x 80 x 42 mm color: black / natural material: wood+leather packing: carton box weight: ~ 0.25 kg	
BOX MS	size: 130 x 130 x 42 mm color: black / natural material: wood+leather packing: foam + carton box weight: ~ 0.25 kg	
BOX MC	size: 130 x 130 x 42 mm color: black / natural material: wood packing: carton box weight: ~ 0.3 kg	
BOX L	size: 210 x 80 x 42 mm color: black / natural material: wood+leather packing: carton box weight: ~ 0.25 kg	
BOX XL	size: 210 x 130 x 42 mm color: black / natural material: wood+leather packing: carton box weight: ~ 0.4 kg	
BOX COLORS		

PAD+
LOGISTICS

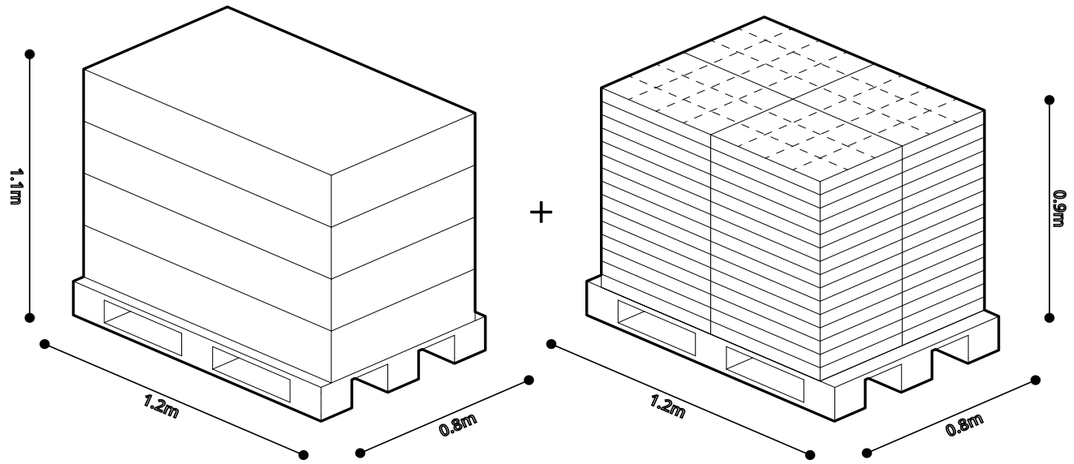

ORDERS & MOQ

Our standard minimum order quantity is 100 sets.
That means you will get 100 felt PADS & 600 wooden boxes.

PACKING & DELIVERY

Each felt PAD is packed in a recyclable (PBAT) foil beg and carton boxes. 1 carton = 15 PADS
Each wooden box is packed a recyclable small carton box with graphic.
We delivery goods always within 1m3 volume wraped on the wooden pallet.
To estimate exact weight and volume of your order you can use our “order calculator” file.

PRODUCT MANUFACTURED IN POLAND & CHINA WITH THE HIGEST QUALITY STANDARDS

© JANG 2019

PAD+
DESIGN

JANG

DESIGN BY

Filip Gałuszka

Asia O`Neill

PAD+ is a product of JANG created by architect Filip Gałuszka and product developer Asia O`Neill.

"We are specialized in personalized objects and spaces always engaging deep material reaserch and precise manufacture techniques. We live around furniture from our early childhood, believing that good quality objects can shape our characters and leave a trace in our memory for entire life."

HOLISTIC APPROACH
Besides the PAD+ in our collection you can find a few other products dedicated to wardrobes and dressing rooms. For our customers from furniture industry we design and produce custom hangers, shoowroom clothes imitations and organizers. We hope to meet you in our world.

CHINA / 中国
北京市朝阳区燕东科技
园A座 3017 100015 北京
Yan Dong Science Park, Block A
Room 3017 Chaoyang District
100015 Beijing
t. +86 18612909033
t. +86 18612941705

POLAND / 波兰
Dluga 140 street
34-433 Dursztyn
t. +48 504728421

beijing@jangstudio.co
www.jangstudio.co